FERMENTASAURUS

UNI TANKS

INSTRUCTION MANUAL

This instruction manual provides information on the safe handling and usage of the Fermentasaurus Uni Tank. For safety reasons, it is vital that you read this instruction manual from front to back before using this product.

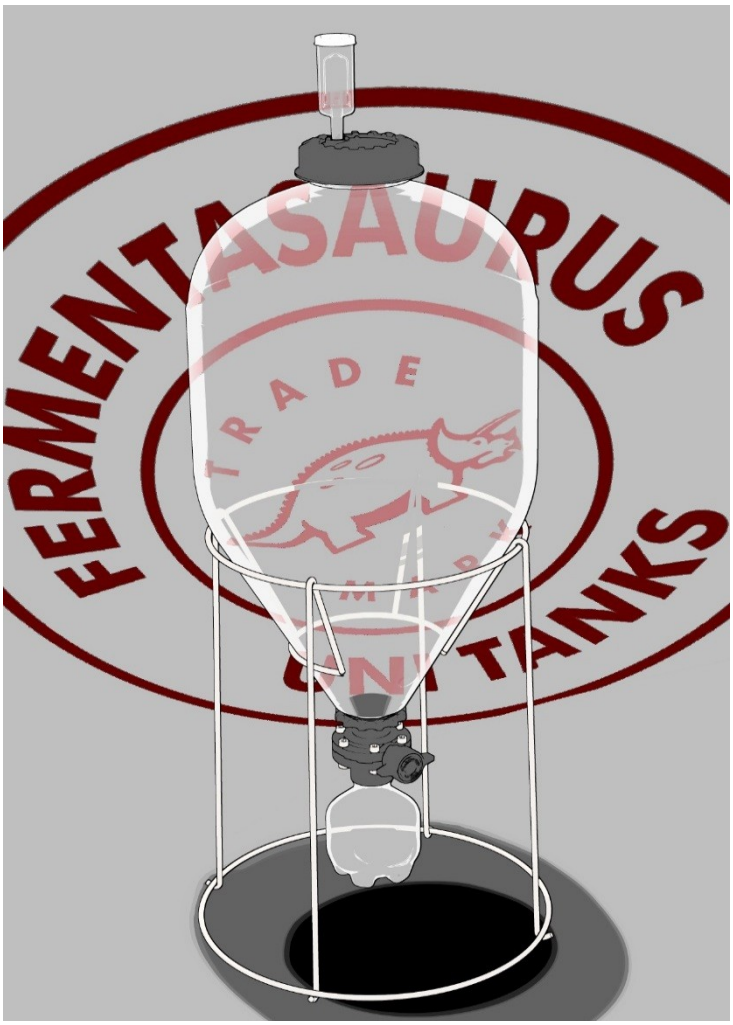

Ferment, Clarify, Dispense. The uni tank that does it all.

WARNINGS

1. Clean, wash and sanitise the tank at ambient temperatures. Do not clean, wash and sanitise the tank at temperatures **above 50^{0}C (122^{0}F).**

2. Do not apply more than **2.4bar (35PSI)** to the tank under any circumstance.

3. **NEVER** connect to an unregulated pressure source.

4. If you connect an external pressure source; ensure it has an independent pressure release valve (PRV) pre-set to below 2.4Bar (35psi).

5. Use only the RED pressure release valve supplied by MCH Australia Pty Ltd on the pressure lid.

6. Do not tamper with the pressure relief valve.

7. Do not use the tank under pressure if it has been physically damaged i.e. dropped on the ground.

8. Do not expose to temperatures below -2°C (28.5°F).

9. Keep the tank out of direct sunlight and other sources of UV radiation.

10. The tank is pressure tested at production and is marked with a date for retesting. If it is being used under pressure then a hydrostatic test must be conducted every 24 months to ensure that it is safe for reuse.

11. Cleaners must be diluted to suitable concentrations before use. If extended contact time is expected, then users must ensure that cleaners are chemically compatible with PET, NBR, EPDM, Nylon and Stainless Steel. We recommend the Atomic 15 range of sanitisers. Other possible cleaning/sanitising agents include:
    a. **Phosphoric Acid** Based Sanitisers (diluted to no rinse strength, e.g. 15ml per 10L)
    b. **Peroxide Based Cleaners** (e.g. 1 teaspoon Sodium Percarbonate per litre of H_20)
    c. **Sodium Metabisulfite** or **Camden tablets**
    d. **Sodium Hydroxide** solution (<20g NaOH per litre H_2O)

FERMENTASAURUS

Starter Kit Parts List

(Includes all the components in the below image)

Three Piece Airlock (PC/PE) Part RET0054

Gravity Lid Assembly Part 9197

- **-Thread Ring** (PA6-GF30)
- **-Gravity Lid** (PA6-GF30)
- **-Lid Seal** (NBR)

35L Tank (Bottle Grade PET) Part 9142

Metal Frame (201SS) Part 9173

Dump Valve Assembly Part 9159

- **-Spigot** (PA6-GF30)
- **-Conical Seal** (NBR)
- **-Spigot Nut** (PA6-GF30)
- **-Spigot O-Ring** (NBR)
- **-Butterfly Dump Valve** (See Below)
- **-Gate O-Ring** (NBR)
- **-Gate to Barb Fitting** (PA6-GF30)

500ml Collection Bottle with Lid Part 9180

- **-500ml bottle** (PET)
- **-Cap** (ABS)
- **-Lid Seal** (Silicone)

Also Included:

- **-Fermentasaurus Graduations Sticker** (Vinyl) Part 9210
- **-Thermochromatic Temperature Sticker** (Vinyl)
- **-Instruction Booklet** (Paper)

FERMENTASAURUS

Butterfly Valve Parts *Included in Part 9159*

-6x Housing Nut+Bolt (SS) M6x25mm

-Valve Housing Top 1”BSP (PA6-GF30)

-Valve Disc

-Handle (PA6-GF30)

-Handle Cover (PA6-GF30)

-Handle Screw (SS) M5x21mm

-Washer (PA6-GF30)

-Handle Spring (SS)

-Butterfly Disc Seal (NBR)

-Valve Housing Bottom (PA6-GF30)

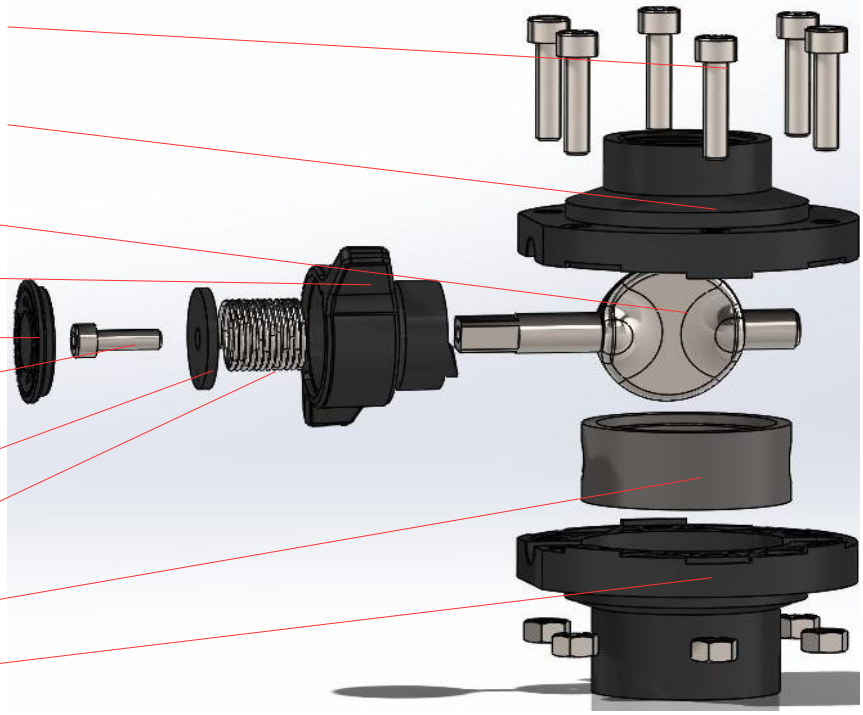

Seal Kit Part 9166

Includes all the rubber parts needed for your Fermentasaurus in one convenient kit.

- Lid Seal
- Conical Seal
- Spigot O-ring
- Gate O-ring
- Butterfly Disc Seal
- Poppet o-ring x3
- Dip tube o-ring x2
- Post o-ring x4
- Silicone Dip Tube

Dump Valve Assembly Instructions

1. Ensure that all components have been cleaned and sanitised.
2. Check that the two NBR seals (O-ring and conical seal) are attached to the spigot. The O-ring is placed in a recess on the bottom face of the spigot; the cone seal slides over the threaded portions of the spigot and rests on the tapered section.
3. Carefully drop the spigot piece into the tank from the top of the bottle. The threads should poke through the bottom hole of the tank. If the spigot piece is not in position, tap or shake the tank until the threaded end falls through the hole in the bottom.

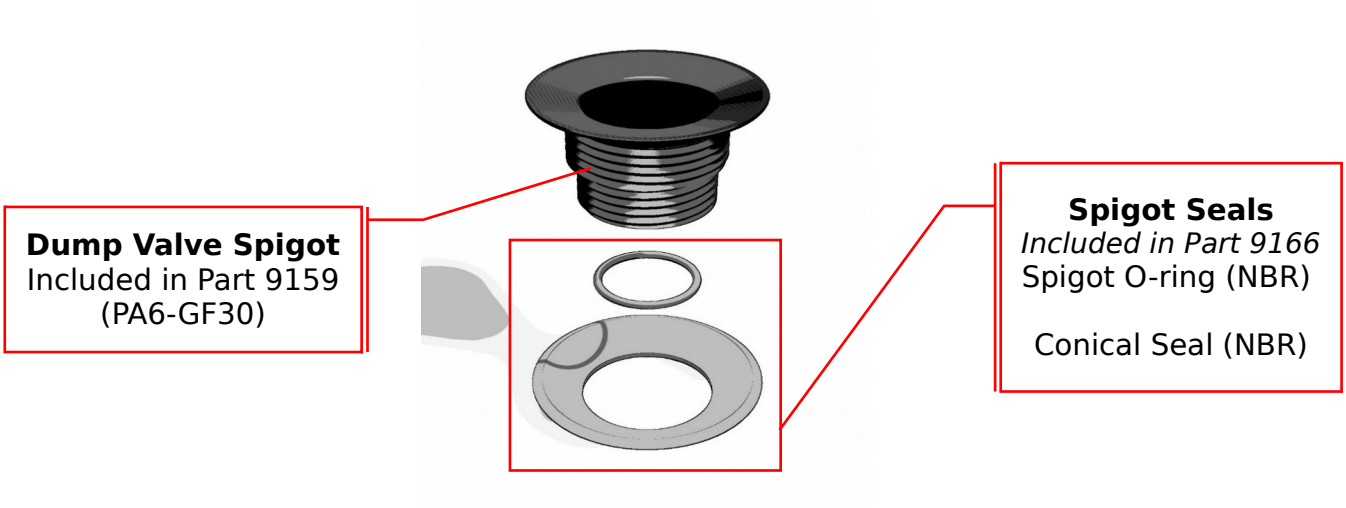

4. With the spigot threads protruding through the bottom of the tank, you can now screw on the spigot nut. Ensure the spigot is correctly aligned and then tighten firmly. The spigot can accept a 19mm (or a ¾”) hex (Allen) key.
   NOTE: This is a **LEFT-HANDED THREAD.**

5. Ensure the spigot O-ring is still correctly seated on the bottom face of the spigot.

6. Check that the gate O-ring on the underside of the valve is in place. This ensures correct sealing of the collection bottle.

7. Screw the Butterfly Valve onto the spigot. Not much force is required to compress the O-ring to form a seal. NOTE: This is a **RIGHT-HANDED THREAD**.

8. You should now fill the tank with water or sanitiser to check that there are no leaks. If you do find a leak; loosen off the spigot nut, realign the assembly with the tank and re-tighten all components.

9. If you do not have access to a suitable hex key for assembly, then you can hold the Spigot Nut in one hand and the Butterfly valve in the other and tighten. The opposite threads will cause both the cone seal and the O-ring to compress and seal. **NOTE**: Using this method to tighten can make the disassembling process more difficult.

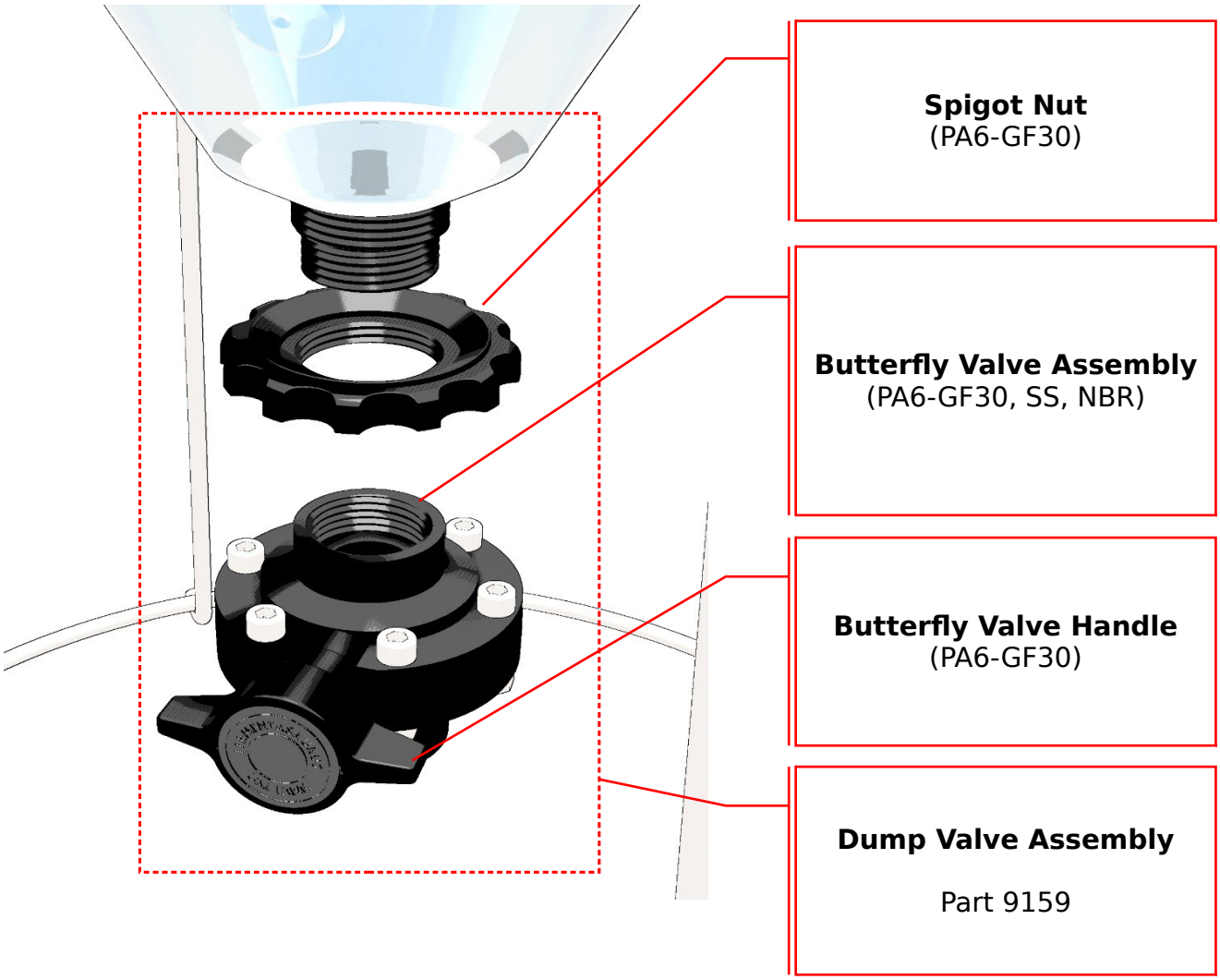

Gravity Lid Assembly Instructions

1. Clean and sanitise all components prior to assembly.
2. Lubricate the NBR Lid Seal with some food grade lubricant such as Haynes Lubri-film Plus (Part 6905).
3. Attach the NBR Lid Seal to the underside of the Gravity Lid.
4. Once the seal is firmly seated on the underside of the gravity lid place them both on top of the neck of the tank.
5. Lubricate the outer edge of the top surface of the lid with some food grade lubricant.
6. Place the top thread ring over the lid and tighten in the clockwise direction. Over-tightening may make it difficult to undo later.
7. Place the three-piece airlock into the hole at the top of the gravity lid. No grommet or seal is required. Simply press the airlock firmly in place.

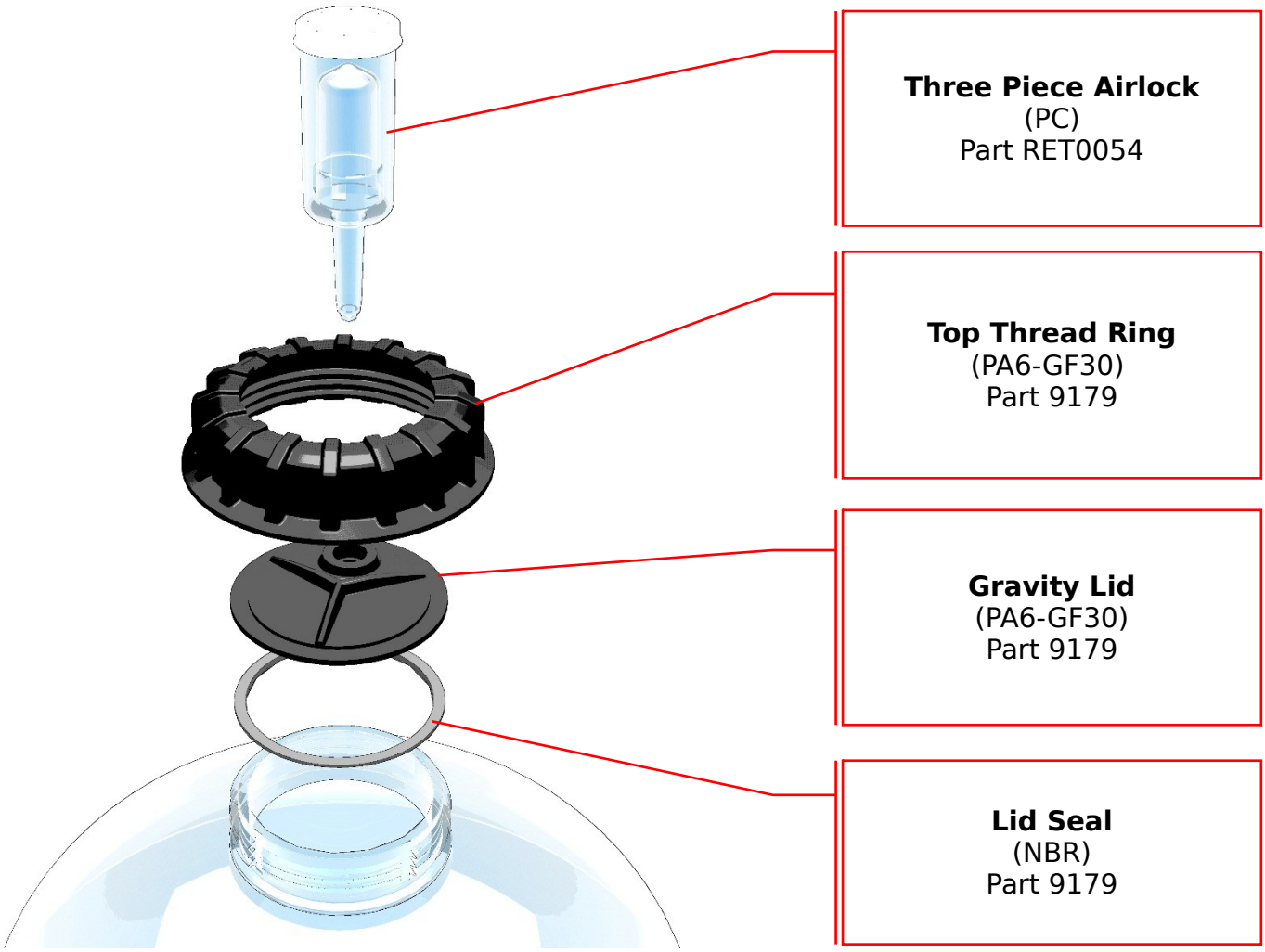

FERMENTASAURUS

Pressure Kit Parts List Part 9227

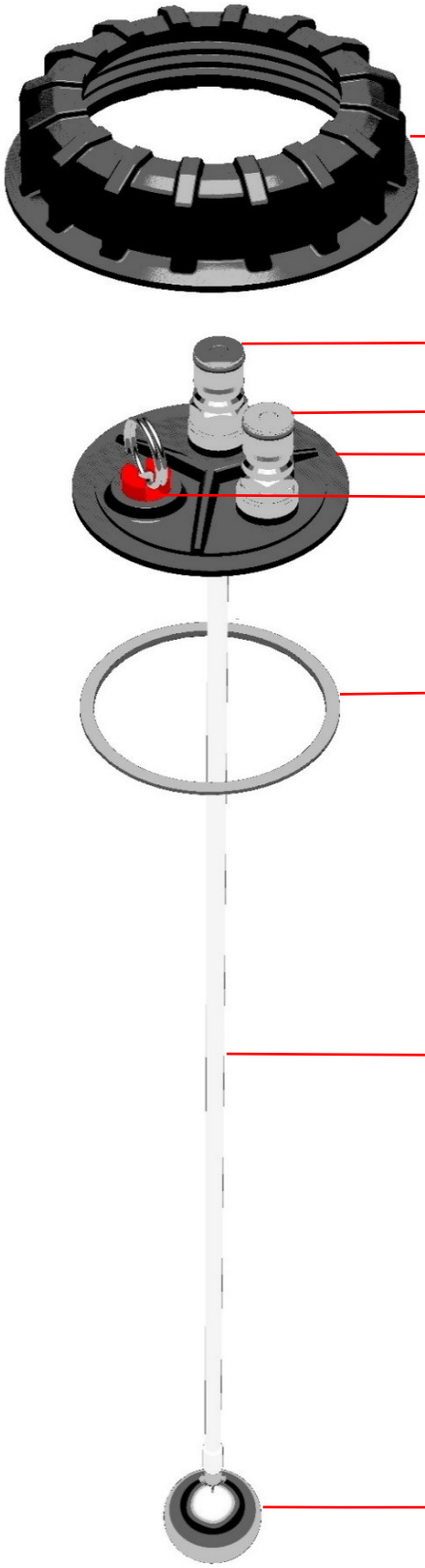

Top Thread Ring
(PA6-GF30)
(Included in Starter Kit)

Liquid Post Bulkhead Fitting w Short Dip Tube
(304 SS)
Part 7070 & 6097

Gas Post Bulkhead Fitting
(304 SS)
Part 7087

Pressure Lid
(PA6-GF30)

Red Pressure Relief Valve
(Nylon and Stainless Steel)
Part 9289

Lid Seal
(NBR)

Silicon Dip tube
(Silicone)
Part 9258 Single
Part 9241 with Float

Float
(304 SS)
Part 9241

Pressure Lid Assembly Instructions

1. Clean and sanitise all components prior to assembly.
2. Thread the red pressure release valve into the pressure lid. Screw down firmly.
3. Ensure that the gas and liquid bulkhead fittings are correctly assembled with the post fully tightened onto the Pressure Lid. Insert the bulkhead fittings into the holes in the pressure lid and tighten the locknuts. O-rings should be located on the top surface of the lid for correct sealing.
4. Lubricate the silicon dip tube with some no rinse sanitiser and slide one end over the stem of the liquid post bulkhead fitting. Slide the other end of the silicon tube over the floating pickup tube.
5. Lubricate the entire NBR Lid Seal with some food grade lubricant and fit to the underside of the Gravity Lid.
6. Place the pressure lid on the mouth of the Fermentasaurus and ensure that the seal seats correctly.
7. Put a small amount of food grade lubricant on the top outer ring of the cap.
8. Place the top thread ring over the lid and tighten firmly.

Graduations Sticker

The graduations sticker has a **RED** line at the 28 Litres (7.4 Gallons) mark that is designed to line up with the topmost mold line of the main tank. Keep in mind that the tank will expand under pressure which will lead to a slight inaccuracy of these markings. This is normal.

Collection Bottle

The collection bottle has several uses. Its primary function is to collect and harvest yeast. It can also be used for:

1. Dry Hopping
2. Beer Sampling
3. Collection and disposal of unwanted trub or hop material.
4. Pitching yeast.

Yeast Harvesting

1. In order to harvest yeast simply screw the yeast collection bottle onto the Butterfly Valve. You can insert this bottle right from the start of fermentation.

2. Once the wort is inside the tank, pitch the yeast either from the top of the tank or from the bottom with the collection bottle.

3. When the collection bottle has been fitted, open (vertical) the butterfly valve so that yeast can grow and settle inside the collection bottle during primary fermentation.

4. Crash chilling the Fermentasaurus following primary fermentation will accelerate the clarification process of yeast falling out of suspension. To avoid thermal shock to the yeast, the beer should be cooled slowly at a rate of -1°C per day down to 5 – 8°C. This can be done by fermenting your beer in a suitable fridge with temperature control. If your fridge is too small to fit a Fermentasaurus, you could transfer your beer to a keg with a silicon dip tube (Part 9258) and stainless steel float (Part 9241) installed and crash chill in that.

5. Before removing the yeast collection bottle from the tank, pull the pressure relief valve to release any pressure inside the tank.

6. To remove the collection bottle, close the butterfly valve and grip the valve body to stop it from unscrewing from the spigot, then Unscrew the collection bottle. It is advisable to place a shallow tray or some paper towels beneath the bottle to catch any drips.

7. The harvested yeast in your collection bottle can be capped and stored in the fridge for your next brew.

Other Tips

1. **No need to do whirlpool in your kettle**
   As the fermenter is conically shaped, there is no need to do a whirlpool in your kettle. After your wort has cooled you can dump all of the trub and hop material from your boil into the tank. The vegetable matter will settle to the bottom of the cone quickly, allowing you to easily dump it directly with the butterfly valve.

2. **Dry hop without compromise**
   Traditionally, dry hopping requires the fermenter lid to be removed. This presents a risk of bacterial contamination and oxidation to the beer. By dry hopping with the collection bottle, you can avoid these issues.
   After the yeast has been collected, you can fill the collection bottle with your favourite hop flowers or pellets and re-fit it onto the butterfly valve. Open the butterfly valve and the hop aromas will begin to diffuse into your beer.

   Note: If you have a CO2 cylinder you can also purge the oxygen out of the hops before connecting to the butterfly valve. If the hops get stuck, try squeezing the sides of the collection bottle to pump the hops out.

3. **Naturally ferment or dry hop under pressure**
   Some people believe that fermenting beer under pressure is the best way to go. With an adjustable pressure relief valve (Spunding valve) attached to the **Gas post**, you can control the build up of pressure inside your tank.
   Various advantages exist for fermenting under controlled pressure and these include:
   - Reducing ester production and controlling ester profiles.
   - The capacity to ferment at higher temperatures with fewer off flavours.
   - Early dry hopping during fermentation to allow oxygen in the hops to be metabolised and retain volatile hop compounds.

4. **Stuck Spigot Nut**
   When removing the butterfly valve from the spigot it is important to ensure that the spigot nut is not unscrewed before the valve assembly. Keep in mind that the spigot nut is reverse threaded, so loosening the valve while holding onto the spigot nut will cause both to loosen at the same time. This could cause the spigot nut to bind to the valve. If this happens you will need to use a 19mm or 3/4” Hex key to hold the spigot in place while backing off the spigot nut and then loosening the valve. If you cannot get to the spigot through the top of the bottle, the butterfly valve can be dissasembled to gain access from below.

5. **Crash Chilling, Emptying and Sampling**
   When crash chilling, emptying or sampling your beer from a Fermentasaurus equipped with a gravity lid, you should remove the airlock to avoid a pressure differential in the tank. This will prevent the walls of the tank from collapsing inward.

Last edited 11 July 2018

MCH Australia P/L
33-35 Smith Road
Springvale
Victoria
Australia 3171